Data Sheet | Item Number: 750-486

4-channel analog input; 0/4 … 20 mA; Single-ended; NAMUR NE 43; Intrinsically safe

https://www.wago.com/750-486

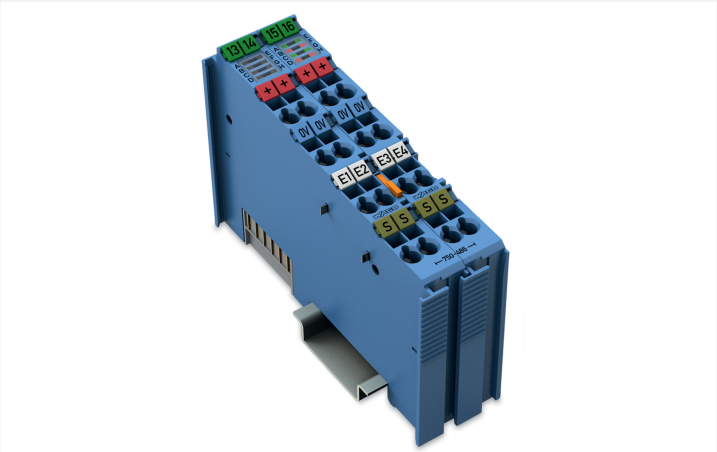

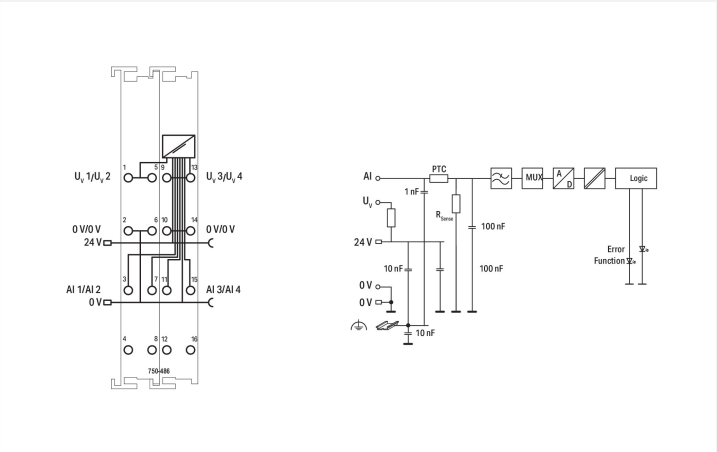

Color: blue

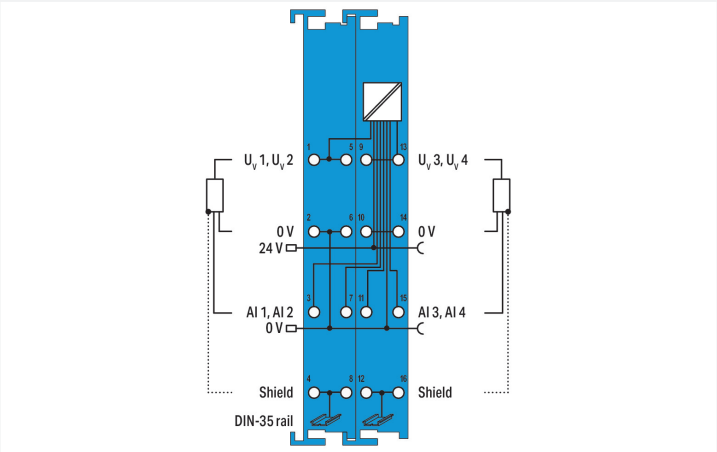

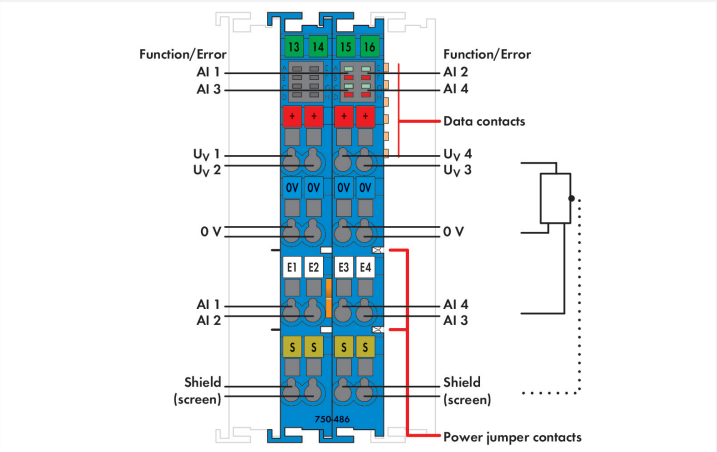

This analog input module powers the intrinsically safe signal conditioners located in the hazardous areas of Zone 0+1 and processes their analog signals.
The WAGO I/O System 750 must be installed either in Zone 2 or in a non-hazardous area.
The 24 V supply is derived from the module's power jumper contacts.
The transmitter supply is non-inherently electronically short-circuit-protected.
The shield directly connects to the DIN-rail.
Indicators:
- Green LED (availability ON/OFF)
- Red LED (measurement range overflow/underflow, wire breakage, short circuit)

Field and system levels are electrically isolated.

Notes

Note	The analog input module must only be operated via 24 VDC Ex i! General information (e.g., installation regulations) on explosion protection is available in the WAGO I/O System 750 manuals!

Technical data

Item description	4-Channel Analog Input; 0/4 … 20 mA; NAMUR NE43
Number of analog inputs	4
Total number of channels (module)	4
Signal type	Current
Signal type (current)	0 … 20 mADC; 4 … 20 mADC; 3.6 … 21 mADC
Sensor connection	2 x (3-wire)
Signal characteristics	Single-ended
Sensor supply	15 VDC
Resolution [bit]	12 bits
Conversion time (typ.)	10 ms
Measurement error (reference temperature)	25 °C
Measurement error, deviation (max.) from the upper-range value	±0.1 %
Temperature error (max.) of the upper-range value	±0.01 %/K
Input resistance (max.)	200 Ω
Intrinsically safe Ex i	Yes
Data width	4 x 16-bit data; 4 x 8-bit control/status (optional)
Supply voltage (system)	5 VDC; via data contacts
Current consumption (5 V system supply)	45 mA
Supply voltage (field)	24 VDC; (Ex i power supply: U_o = max. 26.8 V); via power jumper contacts (power supply via blade contact; transmission via spring contact)
Current consumption, field supply (module with no external load)	19 mA
Power consumption $P_{max.}$	2.7 W (at 4 x 21 mA signal current)
Power loss P_l	1.5 W (at 4 x 21 mA signal current)
Isolation	UM = 375 V system/supply
Number of incoming power jumper contacts	2
Number of outgoing power jumper contacts	2
Current carrying capacity (power jumper contacts)	1 A
Indicators	LED (A, E, C, G) green: Function AI 1 … AI 4; LED (B, F, D, H) red: Error AI 1 … AI 4

Explosion protection

Identification	**ATEX:** II 3 (1) G Ex ec [ia Ga] IIC T4 Gc; II (1) D [Ex ia Da] IIIC; I (M1) [Ex ia Ma] I **IECEx/INMETRO:** Ex ec [ia Ga] IIC T4 Gc; [Ex ia Da] IIIC; [Ex ia Ma] I
Ex standard	EN IEC 60079-0, -7, -11
Safety-relevant data (circuit)	U_o = 27.3 V; I_o = 98.4 mA; P_o = 0.672 W; linear characteristic curve
Reactances Ex ia IIC	L_o = 970 µH; C_o = 88 nF
Reactances Ex ia IIB	L_o = 13 mH; C_o = 683 nF
Reactances Ex ia IIA	L_o = 22 mH; C_o = 2.28 µF
Reactances Ex ia I	L_o = 31 mH; C_o = 3.6 µF
Reactances (note)	Reactances without accounting for the concurrence of capacitance (C_o) and inductance (L_o)

Connection data

Connection technology: inputs/outputs	16 x CAGE CLAMP®
Connectable conductor materials	Copper
Connection type	Inputs/outputs
Solid conductor	0.08 … 2.5 mm² / 28 … 14 AWG
Fine-stranded conductor	0.08 … 2.5 mm² / 28 … 14 AWG
Strip length	8 … 9 mm / 0.31 … 0.35 inches

 Continued on next page

Physical data

Width	24 mm / 0.945 inches
Height	100 mm / 3.937 inches
Depth	67.8 mm / 2.669 inches
Depth from upper-edge of DIN-rail	60.6 mm / 2.386 inches

Mechanical data

Mounting type	DIN-35 rail

Material data

Color	blue
Housing material	Polycarbonate; polyamide 6.6
Fire load	2.033 MJ
Weight	116 g
Conformity marking	CE

Environmental requirements

Ambient temperature (operation)	0 … +55 °C
Ambient temperature (storage)	-25 … +85 °C
Protection type	IP20
Pollution degree	2 per IEC 61131-2
Operating altitude	0 … 2000 m / 0 … 6562 ft
Mounting position	Horizontal left, horizontal right, horizontal top, horizontal bottom, vertical top and vertical bottom
Relative humidity (without condensation)	95 %
Vibration resistance	per IEC 60068-2-6
Shock resistance	15g per IEC 60068-2-27
EMC immunity to interference	per EN 61000-6-2, marine applications
EMC emission of interference	per EN 61000-6-3, marine applications
Exposure to pollutants	per IEC 60068-2-42 and IEC 60068-2-43
Permissible H_2S contaminant concentration at a relative humidity 75 %	10 ppm
Permissible SO_2 contaminant concentration at a relative humidity 75 %	25 ppm

Commercial data

PU (SPU)	1 pcs
Packaging type	Box
Country of origin	DE
GTIN	4055143516044
Customs tariff number	85389099990

Product classification

UNSPSC	32151705
eCl@ss 10.0	27-24-26-01
eCl@ss 9.0	27-24-26-01
ETIM 9.0	EC001596
ETIM 8.0	EC001596
ECCN	NO US CLASSIFICATION

 Continued on next page

Environmental Product Compliance

CAS-No.	1303-86-2 1317-36-8 7439-92-1
REACH Candidate List Substance	Diboron trioxide Lead Lead monoxide
RoHS Compliance Status	Compliant,With Exemption
RoHS Exemption	6(c) 7(a) 7(c)-I 7(c)-II
SCIP notification number (Austria)	549055d6-6f9f-4c9d-b855-7486a1d6cb3a
SCIP notification number (Belgium)	7c5e0ec5-4b5c-495e-85ab-8c4b17d0b137
SCIP notification number (Bulgaria)	485c2c34-1cda-4cc4-a49f-bdbe01d8d580
SCIP notification number (Czech Republic)	474cd881-197a-4e7f-9d9d-56ae52483311
SCIP notification number (Denmark)	7f8cc8a2-4c17-4246-901a-f36a098de931
SCIP notification number (Finland)	7602d62b-94b5-44a6-8da6-ccfea8ef5ecf
SCIP notification number (France)	60a2160b-b980-4efb-ba16-b12cd1cabb0d
SCIP notification number (Germany)	9e11c3b8-9702-4919-a91b-bda35f90810c
SCIP notification number (Hungary)	8119bf7f-3b21-48b7-ab84-a594bf80a530
SCIP notification number (Italy)	40b21ee0-9bc8-486f-9958-c6e22e9afb1b
SCIP notification number (Netherlands)	97e4e9f6-cc3f-4289-9a68-d071c0e6fa99
SCIP notification number (Poland)	f0ea8734-9828-4e42-86bd-3c858df8aa95
SCIP notification number (Romania)	8d08dea9-f978-4ce4-9dc1-dcf3e759b55f
SCIP notification number (Sweden)	c378fdab-274a-422c-a91c-1e8be031c67d

Approvals / Certificates

General approvals

Approval	Standard	Certificate Name
EAC GZO Almaty Standart	TP TC 020/2011	EAC CoC 03083
KC National Radio Research Agency	Article 58-2, Clause 3	MSIP-REM-W43-AIM750
UL Underwriters Laboratories Inc. (ORDINARY LOCATIONS)	-	E175199

Declarations of conformity and manufacturer's declarations

Approval	Standard	Certificate Name
EU-Ex-Declaration of Conformity WAGO GmbH & Co. KG	-	-
UK-Ex-Declaration of Conformity WAGO GmbH & Co. KG	-	-

Approvals for marine applications

Approval	Standard	Certificate Name
ABS American Bureau of Shipping	-	22-2219060
DNV DNV GL SE	DNV-CG-0339,Aug.2021	TAA0000194
KR Korean Register of Shipping	-	KR HMB05880-AC001
LR Lloyds Register EMEA	-	LR22180952TA
PRS Polski Rejestr Statków	-	TE/1101/880590/23

Approvals for marine applications

RINA RINA Germany GmbH	-	ELE343521XG001

 Continued on next page

Approvals for hazardous areas

Approval	Standard	Certificate Name
ATEX TUEV Nord Cert GmbH	EN 60079-0	TUEV12ATEX106032X (Ex ec[iaGa] IIC T4 Gc, [Ex ia-Da] IIIC, [Ex iaMa] I)
CCC CNEX	CNCA-C23-01	2020312310000211 (Ex ec[iaGa] IIC T4 Gc, [Ex ia-Da] IIIC, [Ex iaMa] I)
IECEx TUEV Nord Cert GmbH	IEC 60079,IEC 60079-0	IECEx TUN12.0039X (Ex ec[iaGa] IIC T4 Gc, [Ex ia-Da] IIIC, [Ex iaMa] I)
INMETRO TÜV Rheinland do Brasil Ltda.	-	TÜV_14.1911_X
KTL Korea Testing Laboratory	KOSHA Article 34, IEC60079-0	20-KA4BO-0606X
UKEx Element Materials Technology UK	-	EMA21UKEX0069X
UL Underwriters Laboratories Inc. (HAZARDOUS LOCATIONS)	UL 121201	E198726

Downloads

Environmental Product Compliance

Compliance Search

Environmental Product Compliance 750-486	

Documentation

Manual

Product Manual 4AI 0/4–20 mA, Ex i	3335842187 | 2 | en-US | 2024-12-12 13:37 17.12.2024	pdf 5401.16 KB	

System Description

750/753 Series I/O-System – General Product Information	pdf 953.35 KB	
Overview on WAGO-I/O-SYSTEM 750 approvals	pdf 770.48 KB	
Ex i Overview	pdf 442.07 KB	

Bid Text

750-486	19.02.2019	xml 6.40 KB	
750-486	06.10.2017	doc 32.00 KB	

Instruction Leaflet

CCC Ex (Additional information)	26.04.2023	pdf 143.96 KB	

 Continued on next page

CAD/CAE-Data

CAD data	CAE data
2D/3D Models 750-486	EPLAN Data Portal 750-486
	WSCAD Universe 750-486
	ZUKEN Portal 750-486

1 Compatible Products

1.1 Optional Accessories

1.1.1 DIN-rail

1.1.1.1 Mounting accessories

Item No.: 210-196
Aluminum carrier rail; 35 x 8.2 mm; 1.6 mm thick; 2 m long; unslotted; similar to EN 60715; silver-colored

Item No.: 210-198
Copper carrier rail; 35 x 15 mm; 2.3 mm thick; 2 m long; unslotted; according to EN 60715; copper-colored

Item No.: 210-508
Steel carrier rail; 35 x 15 mm; 1.5 mm thick; 2 m long; slotted; galvanized; similar to EN 60715; silver-colored

Item No.: 210-197
Steel carrier rail; 35 x 15 mm; 1.5 mm thick; 2 m long; slotted; similar to EN 60715; silver-colored

Item No.: 210-506
Steel carrier rail; 35 x 15 mm; 1.5 mm thick; 2 m long; unslotted; galvanized; similar to EN 60715; silver-colored

Item No.: 210-114
Steel carrier rail; 35 x 15 mm; 1.5 mm thick; 2 m long; unslotted; similar to EN 60715; silver-colored

Item No.: 210-118
Steel carrier rail; 35 x 15 mm; 2.3 mm thick; 2 m long; unslotted; according to EN 60715; silver-colored

Item No.: 210-115
Steel carrier rail; 35 x 7.5 mm; 1 mm thick; 2 m long; slotted; according to EN 60715; "Hole width 18 mm; silver-colored

Item No.: 210-112
Steel carrier rail; 35 x 7.5 mm; 1 mm thick; 2 m long; slotted; according to EN 60715; "Hole width 25 mm; silver-colored

Item No.: 210-504
Steel carrier rail; 35 x 7.5 mm; 1 mm thick; 2 m long; slotted; galvanized; according to EN 60715; silver-colored

Item No.: 210-113
Steel carrier rail; 35 x 7.5 mm; 1 mm thick; 2 m long; unslotted; according to EN 60715; silver-colored

Item No.: 210-505
Steel carrier rail; 35 x 7.5 mm; 1 mm thick; 2 m long; unslotted; galvanized; according to EN 60715; silver-colored

1.1.2 Marking

1.1.2.1 Group marker carrier

Item No.: 750-107
Group marker carrier

1.1.2.2 Marker

Item No.: 2009-145/000-006
Mini-WSB Inline; for Smart Printer; 1700 pieces on roll; stretchable 5 - 5.2 mm; plain; snap-on type; blue

Item No.: 2009-145/000-007
Mini-WSB Inline; for Smart Printer; 1700 pieces on roll; stretchable 5 - 5.2 mm; plain; snap-on type; gray

Item No.: 2009-145/000-023
Mini-WSB Inline; for Smart Printer; 1700 pieces on roll; stretchable 5 - 5.2 mm; plain; snap-on type; green

Item No.: 2009-145/000-012
Mini-WSB Inline; for Smart Printer; 1700 pieces on roll; stretchable 5 - 5.2 mm; plain; snap-on type; orange

Item No.: 2009-145/000-005
Mini-WSB Inline; for Smart Printer; 1700 pieces on roll; stretchable 5 - 5.2 mm; plain; snap-on type; red

Item No.: 2009-145/000-024
Mini-WSB Inline; for Smart Printer; 1700 pieces on roll; stretchable 5 - 5.2 mm; plain; snap-on type; violet

Item No.: 2009-145
Mini-WSB Inline; for Smart Printer; 1700 pieces on roll; stretchable 5 - 5.2 mm; plain; snap-on type; white

Item No.: 2009-145/000-002
Mini-WSB Inline; for Smart Printer; 1700 pieces on roll; stretchable 5 - 5.2 mm; plain; snap-on type; yellow

 Continued on next page

1.1.2.2 Marker

Item No.: 248-501/000-006
Mini-WSB marking card; as card; not stretchable; plain; snap-on type; blue

Item No.: 248-501/000-007
Mini-WSB marking card; as card; not stretchable; plain; snap-on type; gray

Item No.: 248-501/000-023
Mini-WSB marking card; as card; not stretchable; plain; snap-on type; green

Item No.: 248-501/000-017
Mini-WSB marking card; as card; not stretchable; plain; snap-on type; light green

Item No.: 248-501/000-012
Mini-WSB marking card; as card; not stretchable; plain; snap-on type; orange

Item No.: 248-501/000-005
Mini-WSB marking card; as card; not stretchable; plain; snap-on type; red

Item No.: 248-501/000-024
Mini-WSB marking card; as card; not stretchable; plain; snap-on type; violet

Item No.: 248-501
Mini-WSB marking card; as card; not stretchable; plain; snap-on type; white

Item No.: 248-501/000-002
Mini-WSB marking card; as card; not stretchable; plain; snap-on type; yellow

1.1.2.3 Marker carrier

Item No.: 750-103
Group marker carrier

1.1.3 Shield termination

1.1.3.1 Shield clamping saddles

Item No.: 790-108
Shield clamping saddle; 11 mm wide; diameter of compatible conductor; 3 … 8 mm

Item No.: 790-208
Shield clamping saddle; 12.4 mm wide; 3 … 8 mm

Item No.: 790-116
Shield clamping saddle; 19 mm wide; diameter of compatible conductor; 7 … 16 mm

Item No.: 790-216
Shield clamping saddle; 21.8 mm wide; 6 … 16 mm

Item No.: 790-124
Shield clamping saddle; 27 mm wide; diameter of compatible conductor; 6 … 24 mm

Item No.: 790-220
Shield clamping saddle; 30 mm wide; 6 … 20 mm

Item No.: 790-140
Shield clamping saddle; diameter of compatible conductor

1.1.4 Supply module

1.1.4.1 Supply module

Item No.: 750-606
Power Supply; 24 VDC; Diagnostics; Intrinsically safe

Item No.: 750-625/000-001
Power Supply; 24 VDC; Intrinsically safe